# LAB4DC DEHYDRATOR USER MANUAL

## Front view

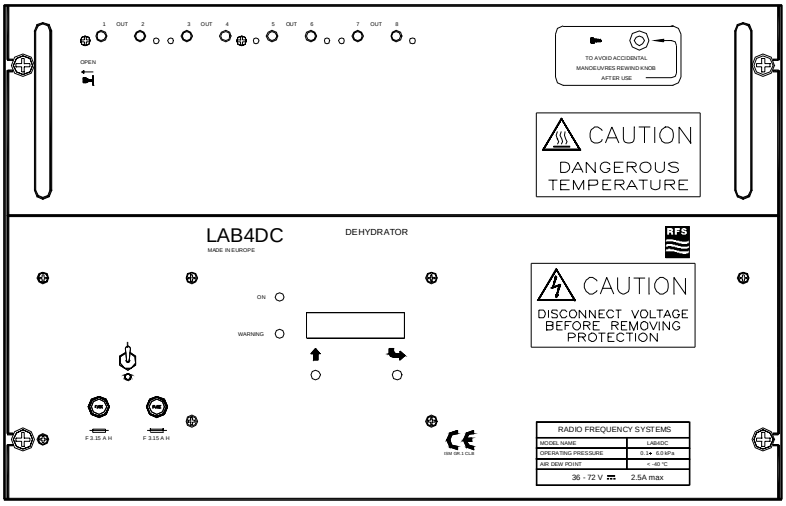


**Package contains N. 1 set (code K5763) including the following accessories (see page 10-11):**

1) **ETSI-N3 brackets**
2) **Fixing screws set**
3) **Power supply connector**
4) **Power supply connector junction shell**
5) **Fuses**
6) **Signalling connector junction shell**
7) **Signalling connector**

## Air flow diagram

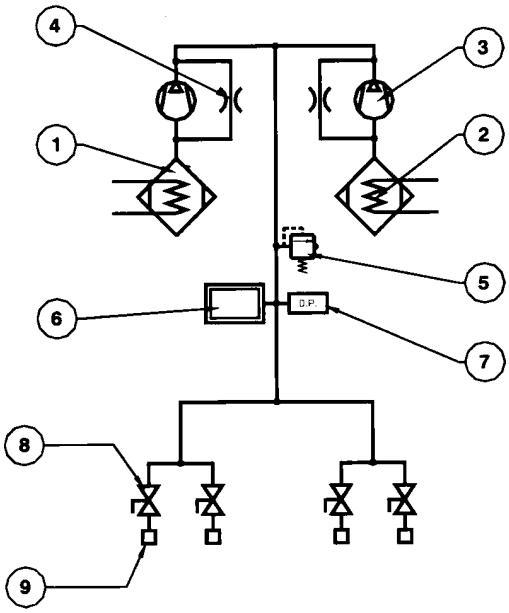


1 DRYING CHAMBER
2 HEATER
3 PUMP
4 AIR BACKWASHING HOLE
5 SAFETY VALVE
6 DIGITAL PRESSURE GAUGE
7 HUMIDITY PROBE
8 SHUTOFF VALVE
9 DRY AIR OUTLET



Radio Frequency Systems • www.rfsworld.com
United States +1-203-630-3311 • Germany +49-511-676-2520 •
Australia +61-3-9751-8400 • Brazil +55-11-4781-2433 • China +86-21-5774-4500

## 1. FEATURES

| | | |
|---|---|---|
| Output pressure | : | programmable from 0.1 kPa up to 6.0 kPa, factory set at 2.0 kPa |
| Maximum flow rate | : | >100 l/h @ output pressure of 0.1 kPa |
| Safety valve | : | built in, factory set at 6.0 kPa ±15 % |
| Output air dew point | : | better than –40°C (-40°F) @ 20°C (68°F) ambient temperature, 80% Relative Humidity |
| Desiccant regeneration | : | automatic by heating |
| Regeneration phase duration | : | 75 min |
| Regeneration phase interval | : | from 4h 30 min to 14h according to the flow rate |
| Alarms | : | power failure, low pressure, high humidity |
| Low pressure alarm | : | programmable from 0 kPa up to output pressure set point, factory set at 1.5 kPa |
| High humidity alarm | : | set at 10% of relative humidity ±2 % |
| Measures | : | air pressure, hour-meter |
| Pressure meter | : | full scale 6.3 kPa<br>resolution 0.1 kPa<br>accuracy ±5 % of full scale ±1 digit |
| Led indications | : | power on, warning |
| Acoustic noise | : | < 50 dBA at 1 m far and 1.5 m high |
| Enclosure degree of protection | : | IP20, according to IEC529 |
| Operating temperature | : | -10°C to +50 °C (+14°F to +122°F) |
| Storage temperature | | -30°C to +60 °C (-22°F to + 140°F) |
| Power rating | : | 36 ÷ 72 Vdc |
| Power consumption | : | < 10 W (at steady state without system leakage)<br>< 110 W (during regeneration phase) |
| Dimensions | : | wall mounting: L = 486, H = 311, D = 135 mm (19.13 x 12.24 x 5.32 inch)<br>rack 19” mounting: L = 482, H = 310 (7U), D = 110 mm (19 x 12.21 x 4.33 inch)<br>frame N3 mounting: L = 533, H = 310, D = 110 mm (20.99 x 12.21 x 4.33 inch) |

Doc. N. C5551.014-E.MUC Date 18/04/02 Rev. 3

| | | |
|---|---|---|
| European Community Directives | : | Low Voltage Directive: 73/23/CEE (as modified by directive 93/68/CEE)<br>Electromagnetic Compatibility Directive: 89/336/CEE (as modified by directives 92/31/CEE and 93/68/CEE) |
| Safety Normative | : | EN 60950 Safety of information technology equipment, including electrical business equipment |
| Electromagnetic Compatibility Normative | : | EN 55022 class A and B<br>EN 50082-1 |
| Quality assurance standard | : | ISO 9001 |
| Weight (with desiccant) | : | 11 Kg (24.25 lb) : rack mounting<br>14 Kg (25.77 lb) : wall mounting |
| Air outlets | : | 4-fold hose-tail fitting with 7 mm (1/4”) diameter, each outlet with shutoff valve |

## 2. DESCRIPTION

The LAB4DC dehydrator has been designed for continuous operation and automatic duty. It supplies dry air up to 100 nl/h at a dew point better then –40°C (-40°F). The output pressure is selectable within the range 0.1 kPa - 6.0 kPa with a 0.1 kPa step.

Air drying is performed by means of two drying towers (operating on alternate cycles) that contain granular substances: the air flows inside the drying tower and lost most of its molecules of water for chemical adsorption. While one tower dries the other one is regenerated by heating and backwashing with a reverse dry air flow.

A fundamental characteristic of the LAB4DC dehydrator is the continuous tracking of the output pressure (pressure target is user programmable). The PWM (Pulse Width Modulation) technique has been used to control the speed of the two pumps (one for each drying tower), so we can reduce to a minimum pump duty, power consumption and acoustic noise. Pump speed control eliminates mechanical pressure regulators that introduce undesirable pressure losses and a worst response to flow rate requirements. At steady state, in a leakageless feeder condition (no output air flow required by the user system), the power consumption is less than 10 W.

The following devices are located on the front panel (see Fig 1, LAB4DC Outline):

- control switch and fuse holders;
- on/off outlet valves;
- liquid crystal display (2 x 16 characters);
- function keys ( ⬆ , ↳ );
- LED's (power on, warning).

On the top panel are located (see Fig 2, LAB4DC Outline):

- power supply connector (D-sub-3W3-C);
- remote alarm connector (IEC48B D);
- outlets with hose-tail fitting with 7 mm (1/4") external diameter.

Warning conditions are locally signaled with the *warning led*; the warning type name is showed on the display (for details, see §4).

The LAB4DC is provided with *power failure & low pressure* and *high humidity* warnings. Remote signaling are also available by means of SPDT (Single Pole Double Throw) relay contacts (remote alarm connector is located on the top panel). The *power supply failure & low pressure* warning relay **is normally energized** (warning off), while the other warning relays are normally **de-energized** (for details, see §3.1).

## 3. INSTALLATION

The LAB4DC dehydrator installation is for wall mounting but with adaptation for 19” standard rack and N3 standard frame.

The dehydrator is to be placed in the upper part of the rack without any other equipment above. If you cannot, check the upper close equipment cannot be damaged by the heat produced (during the regeneration time only) by the LAB4DC.

When the dehydrator is installed in a N3 standard frame, tighten the kit (see package contains) supplied brackets [item 1] with the same screws used for rack mounting; after this step, introduce the dehydrator into the frame and lock it with the screws [item 2] supplied in the kit.

⚠ **It is mandatory to leave an upper free space of at least four units from the dehydrator to the closest equipment**.

After installing the dehydrator, check that all shutoff valves are in off position and that control switch is in "O" (off) position.

- Use the provided ⏚ protective earthing terminal, located on the rear panel of the LAB4DC, for safe operation when you do not have the protection wire on the power supply cable. Use an M6 wire terminal, for the connection.
- Connect user remote alarm connector to the 25 pin reserved socket connector (D sub-miniature type, in accordance with IEC48B norms [items 6 and 7]), located on the top panel of the dehydrator. See table 1 for pin function list.
- Connect the LAB4DC outlets to the RF line.

⚠ **Note: For the air connection the dehydrator and the RF system we recommend using hoses made of butyl caoutchouc or viton. The water vapour permeability of these hoses in much less than for the common PVC hoses.**

**Hoses made of silicone caoutchouc are not suitable for this purpose.**

- **Check for correct type and rated voltage range:** power rating marking is indicated on the front panel.
- To connect the 36 -72 Vdc model use the fixed D-sub-3W3-C connector, placed on the top panel of the dehydrator, and the supplied matching mobile connector [items 3 and 4]. The wire section must be ≥ of 1.5 $mm^2$. Solder the supply cables on the solder cup sockets and the earthing cable on the solder cup plug, put pins in the connectors as shows the following pictures respecting the right polarity (earthing pin is the central). Insert the connector in the protective shell.

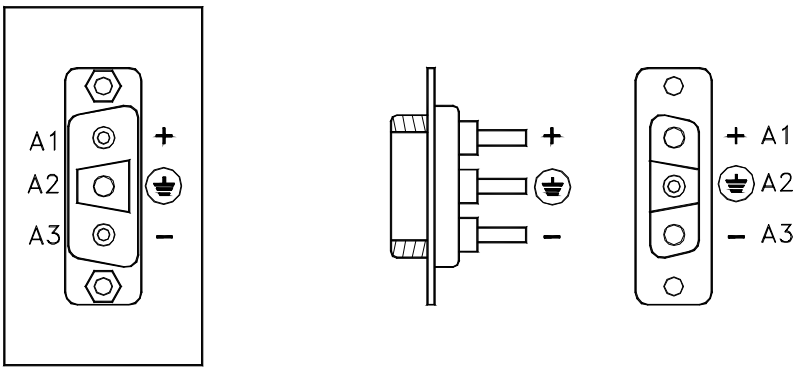


**Fixed connector** **Matching mobile connector**

**An appropriate disconnect device shall be provided as part of the building installation. Disconnect the dehydrator from the supply for servicing.**

**The protection for short-circuit and ground failures of power conductors is a function assigned to installation area system.**

### 3.1 Alarm signaling interface

Remote alarm connector, 25 pin female IEC48B D series, is located on the top panel (Fig. 2).

Remote alarm signaling are available by means of SPDT relay contacts . The *power supply failure & low pressure* warning relay **is normally energized** (warning off), while the other warning relays are normally **de-energized**

The provided **SELV** (Safety Extra-Low Voltage) interface can be used with voltages of 42 Vac or 60 Vdc. Moreover, a limit of 71 V peak, or 120 Vdc., **shall not be exceeded**. If alarm cabling exceed 10 m of length it is recommended the use of shielding cable.

A typical user device interconnection is shown below.

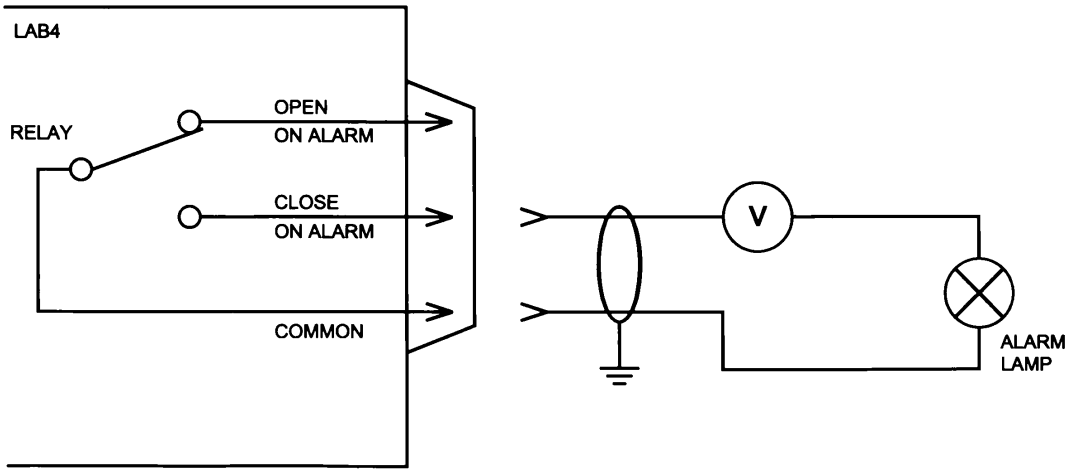

A list of the available warning pin connections is given in the following table.

| Alarm | Pin | Description |
|---|---|---|
| Low pressure and/or power off | 3 | Close on alarm |
| | 16 | Open on alarm |
| | 15 | Common |
| High humidity | 18 | Close on alarm |
| | 5 | Open on alarm |
| | 17 | Common |

### 3.2 First startup, switch on and switch off (see LAB4DC outline, at the end of this paper)

Before proceeding to the first startup, mind to open the desiderated on/off valve by using the apposite knob (located on the front panel). Screw down the knob in valve seat and pull out. Mind to place knob in its parking seat in order to avoid accidental closing of valves (by pushing knob down).

Switch on the dehydrator selecting the "**I**" (on) control switch position. Check *green power on led* lights.

Open the opposite side of the transmission line to be pressurized. Purge the transmission line with dry air by letting it open to the opposite side for a period able to let an air volume (three times the volume of the RF line) flow in the line [purging time (in hours) = (3xV)/100, with V: line volume in liters]. During this phase the warnings and alarms has to be ignored. Then close the opposite side of the transmission line opened before.

Mind that the dehydrator enables the generation of warnings 20 sec. about after any switching on. After some time (depending on volume guide), the equilibrium condition is met.

The LAB4DC is provided with a shutoff valve, one for each air outlet.

Display normally shows the so called *main page* (the displayed information relate to the running output pressure and the hour meter value; see §4.).

On **emergency** or if **stop** is required put control switch in "O" (off) position.

**Mind that is mandatory disconnecting the dehydrator from the supply for servicing**.

**Beware of high temperatures on the drying towers (inside the dehydrator)**

All of the components employed are not radio-active or chemically hazardous.

## 4. MENU FUNCTIONS

A low-power HCMOS 8-bit microcontroller has been used. This choose with the adoption of a display and two function keys allows user to know a large amount of information and to set some parameters such as the pressure related ones and the warning thresholds. These data are arranged in pages showed on the display and are user selectable by pressing the key "↳".

On startup the following *main page*[1] (permanent page) is displayed. In this page the operating gauge pressure and the hour meter value are showed:

```
Pressure      2.0kPa
hourmeter     00012
```

The First row indicates the operating gauge pressure (kPa). In the example showed, we read a running measured pressure of "2.0 kPa". The second row shows the hour meter status. The example says the LAB4DC dehydrator has been running 12 hours long.

Press the key " ⬆ " for lamp test. *Warning led* lights 0.5 seconds about and the display is refreshed.

When warning(s) is active, on the second row disappears the indication of the hour meter status and the appropriate warning message is shot. For example, on *Low pressure* condition the display shows:

```
Pressure      1.0kPa
    LOW PRESSURE
```

This example says the operating gauge pressure is "1.0 kPa" (low pressure factory default threshold is 1.5 kPa). The string "LOW PRESSURE" is the warning message related to the *low pressure* condition.

When more than one warning is running, the strings related to the pending warnings alternate one each other on the second row (one second clock track).

When the *High humidity* condition occur, display shows the followings:

```
Pressure      2.0kPa
  HIGH HUMIDITY
```

[1] A new page appears on the display when the key "↳" is pressed. Firmware provides an *automatic return* to the *main page* from any implemented one (*secondary pages*). The timeout is fixed in one minute. At any pressing of the key "↳", user scrolls all the data pages implemented (*secondary pages*) until *main page* is selected again.

Press the key "↳" to gain the **Pressure target setting menu**. Display shows the following (factory default is 2.0 kPa):

```
Pressure set
 point:  2.0 kPa
```

The example says the target pressure is 2.0 kPa. Press the key " ⬆ " to increase the pressure target at a fixed step of 0.1 kPa. Increment function key only is provided. When the maximum selectable value is reached (6.0 kPa), the minimum allowable value (0.1 kPa) is automatically displayed at the next key pressing. Press the key "↳" to scroll next page and to **enter** the new target pressure setting[2].

On the display appears the **Low pressure setting menu** (factory default is 1.5 kPa):

```
Low pressure
 alarm:  1.5 kPa
```

Press the key " ⬆ " to increase the low pressure threshold with a 0.1 kPa fixed step. Increment function key only is provided. When the maximum value is reached (target pressure, selected in the previous page, minus 0.1), the minimum allowable value (0.1 kPa) is automatically displayed at the next key pressing. For instance, if running target pressure is 2.0 kPa, the software allows user to choose a threshold value in the range 0.1 kPa – 1.9 kPa.

Mind, at startup, all warnings are inhibited during the first 20 seconds of working.

The *Low pressure* warning generation acts in accordance with an hysteresis mechanism. For instance, if the low pressure threshold has been set at 1.5 kPa, *low pressure warning* occurs if the gauge pressure is constantly at (or below) the pressure target for five seconds at least. The warning immediately expires when the gauge pressure runs over the threshold value plus 0.2 kPa (fixed).

Press the key "↳" to scroll next page and to **enter** the new low pressure threshold.

Press the key "↳" to **enter** the new threshold and to return at the *main page*.

## 4.1. Signal lights

The LAB4DC has two signaling LED's:

- **ON**, color - green
- **WARNING**, color - red.

The WARNING led lights on every warning condition. The warning type message is displayed on the second row of the LAB4DC display (see §4.). Whatever the warning(s) declared, there is no interruption in duty and air continues to be supplied.

[2] In order to avoid quick changes in the operating pressure, the target pressure is not modified when in this page.

## 5. SPARE PART LIST

| Description | Model Name |
|---|---|
| Humidity detector | Tba |
| Desiccant charge | Tba |
| Fuse 3,15 A 250V H type | Tba |
| Pump unit | Tba |
| Control board LCA 36-72 Vdc | Tba |
| Safety valve | Tba |
| Heating element | LAB-HE-DC |
| Drying tower stopple | LAB4-DTS |

## 6. ADDITIONAL PART LIST

| Description | Model Name |
|---|---|
| Butyl tube 6 x 3 mm (1/4”) | Tube-01 |
| Tube adaptor M12 x 1.5 for tube with 6-7 mm (1/4”) inner diameter | Tube-01-M12 |
| Tube adaptor M10 x 0.75 for tube with 6-7 mm (1/4”) inner diameter | Tube-01-M10 |
| Tube adaptor G 1/8” for tube with 6-7 mm (1/4”) inner diameter | Tube-01-G18 |
| Tube clamp 10 – 16 mm stainless steel (1/4” & 3/8) | Tube-1016 |

## ANCILLARY KIT CODE K5763

| ITEM | PICTURE | Q.TY | DESCRIPTION | CODE |
|---|---|---|---|---|
| 1 | | 2 | ETSI-N3 brackets | C9881.001 |
| 2 | | 6 | Zinc plated screws M6x16 UNI 7687 | 5VBSFZA00616 |
| | | 6 | Nylon washers ∅ 6 UNI 6592-69 | 5RPGY6V4***1 |
| 3 | | 1 | Socket connector D-sub 3W3-C-S TpX | 3JAFV033Z |
| | | 2 | High power contacts (10A) solder cup - socket | 3JAF***AA |
| | | 1 | High power contacts (10A) solder cup - plug | 3JAM***AD |

| ITEM | PICTURE | Q.TY | DESCRIPTION | CODE |
|---|---|---|---|---|
| 4 | | 1 | Junction shell with screws<br>D-sub 3W3-C | 3EA0B5 |
| 5 | | 2 | Fuse 3.15A 250V 5x20-F-H | 2FFC53V1250H |
| 6 | | 1 | Junction shell with screws D-sub-25 | 3EA060 |
| 7 | | 1 | Plug connector D-sub-25 solder cup | 3JAMV25**11 |

# LAB4DC OUTLINE

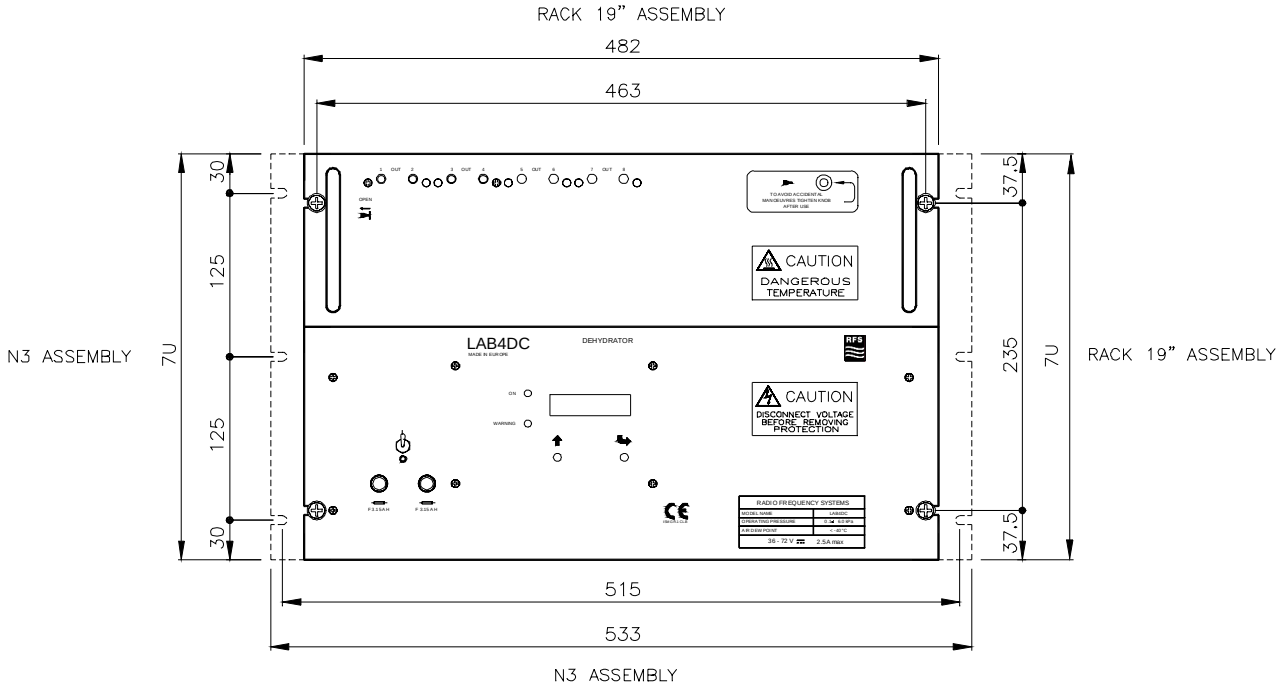


**Fig. 1**

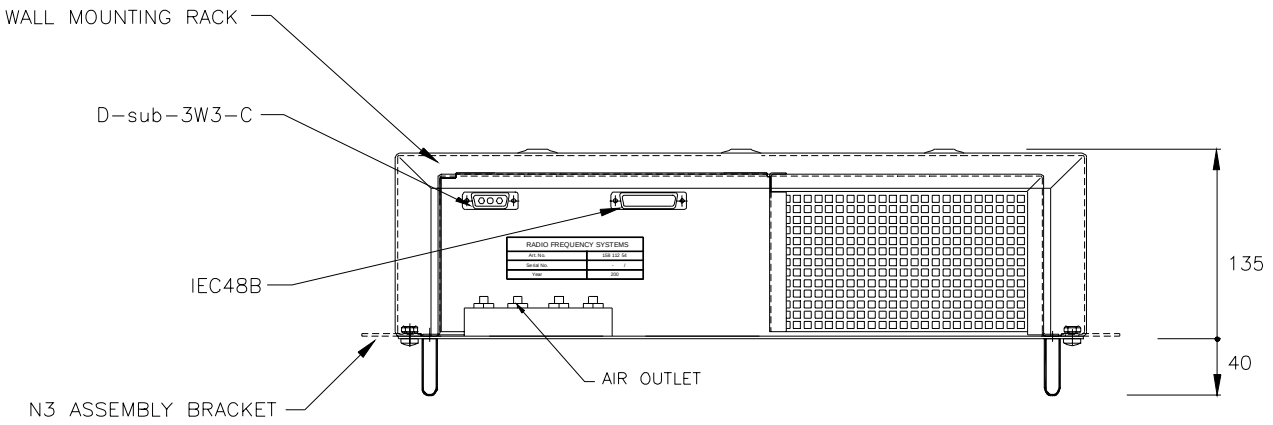
WALL MOUNTING RACK
D-sub-3W3-C
IEC48B
N3 ASSEMBLY BRACKET
AIR OUTLET
RADIO FREQUENCY SYSTEMS
135
40

**Fig. 2**

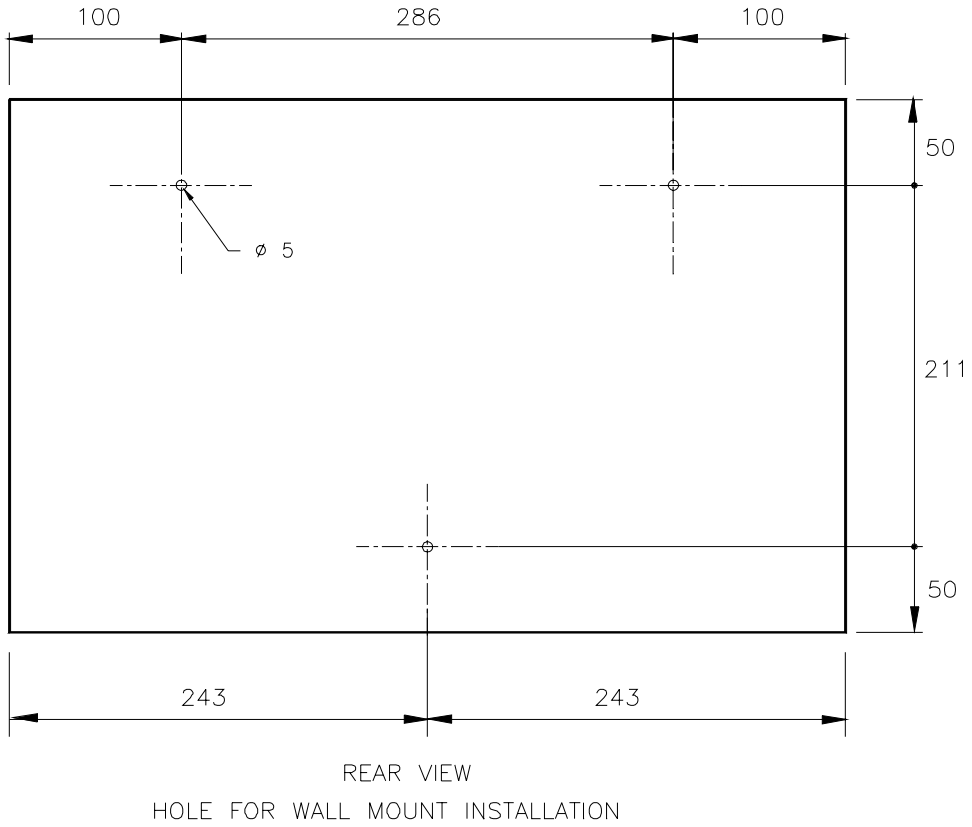
100
286
100
50
ø 5
211
50
243
243
REAR VIEW
HOLE FOR WALL MOUNT INSTALLATION

**Fig. 3**