## Parts of Desiccant Cartridge

| | |
|---|---|
| 3 = Desiccant Cartridge | 158 144 47 |
| 2 = Housing Case for Desiccant Cartridge | 158 144 99 |
| 1 = Angle Tube G 1/8 | 158 144 49 |

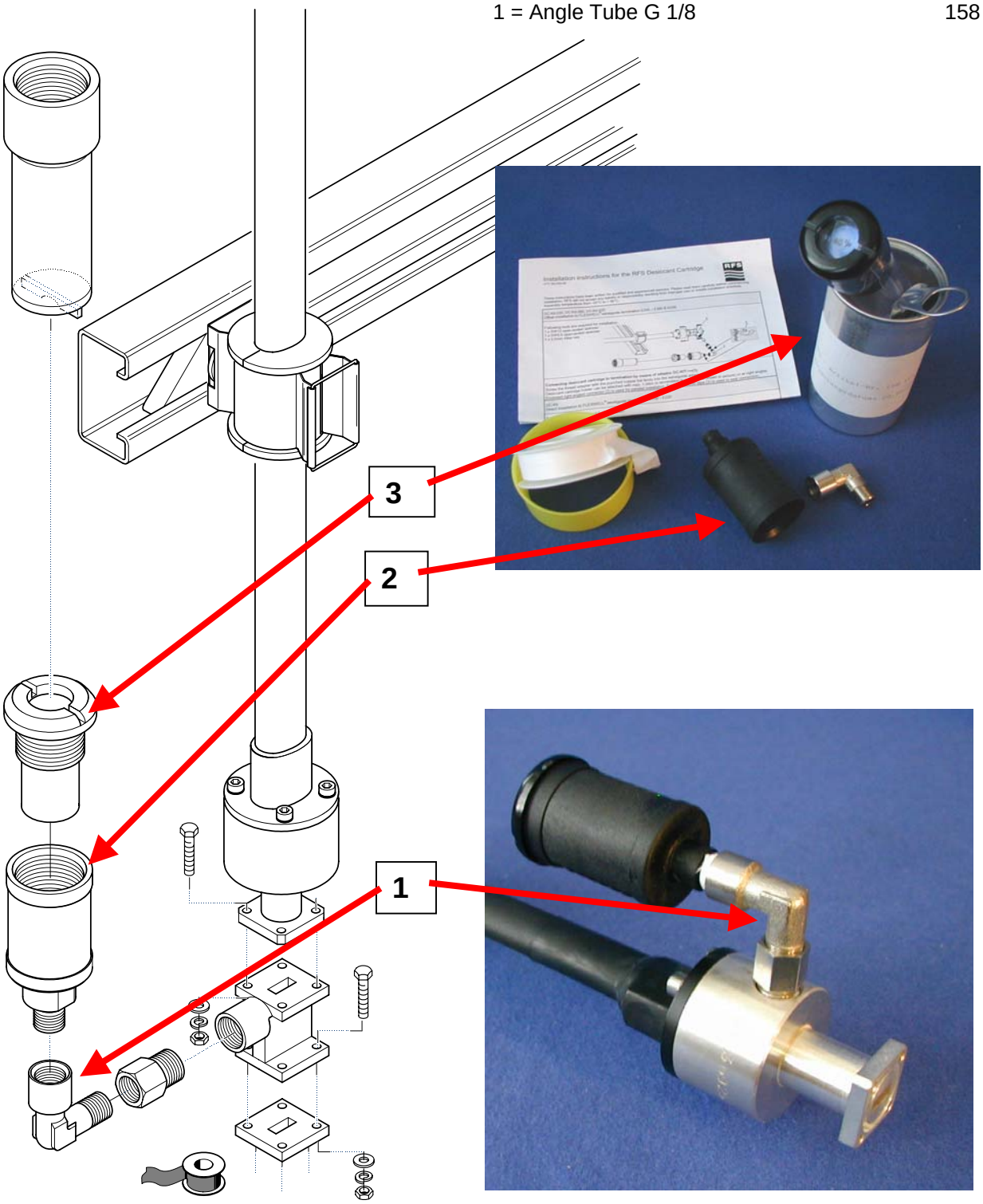


Specifications subject to change without notice