LAB2DC-B DEHYDRATOR USER MANUAL

Front view

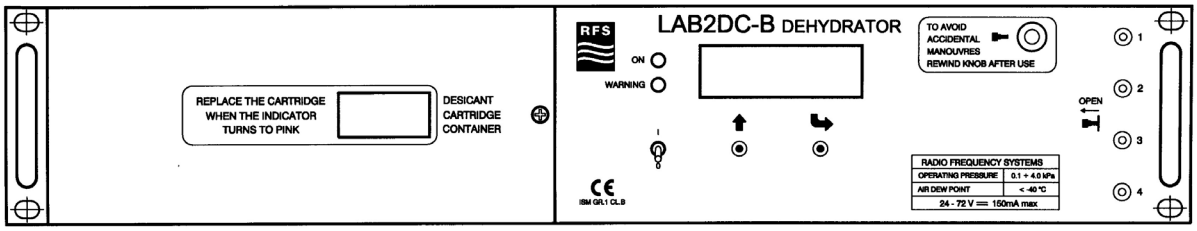

Package contains N. 1 set (code K10531) including the following accessories (see page 10):

1) **ETSI-N3 brackets**
2) **Fixing screw set**
3) **Power supply connector**
4) **Power connector junction shell**
5) **Wall mounting rack**
6) **Signalling connector junction shell**
7) **Signalling connector**

Air flow diagram

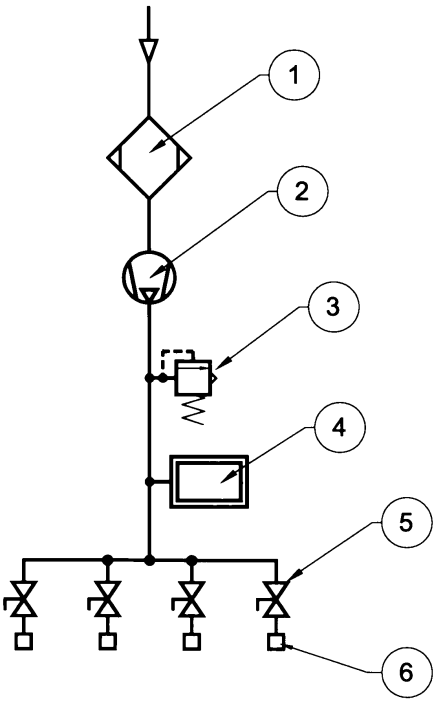

1 DRYING CHAMBER

2 PUMP

3 SAFETY VALVE

4 DIGITAL PRESSURE GAUGE

5 SHUTOFF VALVE

6 DRY AIR OUTLET

Doc. N. C10500.005-E.MU0 Date 28/05/03 Rev. 0

Radio Frequency Systems • www.rfsworld.com
United States +1-203-630-3311 • Germany +49-511-676-2731 •
Australia +61-3-9751-8400 • Brazil +55-11-4781-2433 • China +86-21-5774-4500

1. FEATURES

Output pressure	:	programmable from 0.1 kPa up to 4.0 kPa, factory set at 2.0 kPa
Maximum flow rate	:	> 100 l/h @ output pressure of 0.1 kPa and 20°C (68°F) ambient temperature
Safety valve	:	built in, factory set at 8 kPa +/-10%
Output air dew point	:	better than –40°C (-40°F) @ 20°C (68°F) ambient temperature, 80% Relative Humidity
Desiccant cartridge duration	:	6 month (typical)
Regeneration	:	disposable desiccant cartridge
Desiccant cartridge exhaustion	:	controlled by a front visual indicator
Local alarms	:	power failure and low pressure
Low pressure alarm	:	programmable from 0 kPa up to output pressure set point, factory set at 1.5 kPa
Remote alarm	:	single remote alarm activated by power failure or low pressure
Led indications	:	power on, warning
Measures	:	air pressure, hour-meter
Pressure meter	:	full scale 6.3 kPa resolution 0.1 kPa accuracy ±5 % of full scale ±1 digit
Acoustic noise	:	< 50 dBA at 1 m far and 1.5 m high
Enclosure degree of protection	:	IP20 according to IEC529
Operating temperature	:	-10°C to +50 °C (+14°F to +122°F)
Storage temperature	:	-30°C to +60 °C (-22°F to + 140°F)
Power rating	:	24 ÷ 72 Vdc
Power consumption @ 48Vdc	:	< 2 W (at steady state without system leakage) < 5 W (at max flow rate)
Mounting dimensions	:	Rack 19": L = 482, H =88 (2U), D =208 mm (19 x 3.46 x 8.2 inch) ETSI-N3: L = 532, H =88, D = 208 mm (20.9 x 3.46 x 8.2 inch) Wall: L = 486, H=90, D = 215 mm (19.1 x 3.54 x 8.46 inch)

Doc. N. C10500.005-E.MU0 Date 28/05/03 Rev. 0

European Community Directives	:	Low Voltage Directive: 73/23/CEE (as modified by directive 93/68/CEE) Electromagnetic Compatibility Directive: 89/336/CEE (as modified by directives 92/31/CEE and 93/68/CEE)
Norms	:	Safety Norms: EN 61010-1;EN 60950. Electromagnetic Compatibility Norms: EN 50082-1; EN 55011; EN 55022.
Quality assurance standard	:	ISO 9001
Weight (with desiccant)	:	~ 4 Kg (9 lb) ETSI-N3 or Rack 19” mounting ~ 5 Kg (11 lb) wall mounting
Air outlets	:	4-fold hose-tail fitting with 7 mm (1/4”) diameter, each outlet with shutoff valve

2. DESCRIPTION

The dehydrator has been designed for continuous operation and automatic duty. It supplies dry air up to 100 l/h at a dew point better then –40°C (-40°F). The output pressure is selectable within the range 0.1 kPa ÷ 4.0 kPa with a 0.1 kPa step.

The air is dried through chemical absorption by granular substances in a disposable cartridge accessible from the front panel.

The cartridge must be replaced when the color of the detector integrated into the desiccant cartridge changes color from blue to pink.

A fundamental characteristic of the dehydrator is the continuous tracking of the output pressure (pressure target is user programmable). The PWM (Pulse Width Modulation) technique has been used to control the pump speed, so we can reduce to a minimum pump duty, power consumption and acoustic noise. Pump speed control eliminates mechanical pressure regulators that introduce undesirable pressure losses and a worst response to flow rate requirements. At steady state, in a leakproof feeder condition (no output air flow required by the user system), the power consumption is less than 2 W.

The following devices are located on the front panel (see LAB2DC-B Outline):

- control switch
- on/off outlet valves;
- liquid crystal display (2 x 16 characters);
- function keys (⬆ , ↳);
- LED's (power on, warning).

Warning conditions are locally signaled with the *warning led*; the warning type name is showed on the display (for details, see §4).

The LAB2DC-B is provided with *power failure & low pressure* alarms. Remote signalling is also available by a relay contact (for details, see §3.1).

On the rear panel are located (see LAB2DC-B Outline):

- power supply connector (D-sub-3W3-C);
- remote alarm connector (IEC48B D).

On the right side, on the back side of front panel there are the air outlets with hose-tail fitting (see § 1).

Doc. N. C10500.005-E.MU0 Date 28/05/03 Rev. 0

3. INSTALLATION

An appropriate disconnect device shall be provided as part of the building installation. Disconnect the dehydrator from the supply for servicing.

The protection for short-circuit and ground failures of power conductors and connector is a function assigned to installation area system.

Note: For the air connection the dehydrator and the RF system we recommend using hoses made of butyl caoutchouc or viton. The water vapour permeability of these hoses in much less than for the common PVC hoses.

Hoses made of silicone caoutchouc are not suitable for this purpose.

3.1 For rack 19” mounting

a) Insert the dehydrator in a standard 19” rack.

b) Check that the on/off valves are closed and the main switch is on the “O” position.

c) After checking for correct voltage (power rating marking is indicated on the front panel),connect the power supply cable to the J1 connector located on the rear panel.

d) Connect the remote alarm signal cables to the J2 connector located on the rear panel (see table 1 for pin-out).

e) Connect the outlets to the RF line.

f) **Check for correct type and rated voltage range:** power rating marking is indicated on the front panel.

g) To connect the 24 -72 Vdc model use the fixed D-sub-3W3-C connector, placed on the rear of the dehydrator, and the supplied matching mobile connector [items 3 and 4]. The wire section must be ≥ of 1.5 mm^2. Solder the supply cables on the solder cup sockets and the earthing cable on the solder cup plug, put pins in the connectors as shows the following pictures respecting the right polarity (earthing pin is the central). Insert the connector in the protective shell.

h) For startup see § 3.5

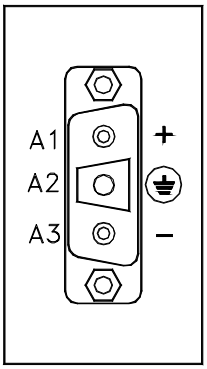

Fixed connector

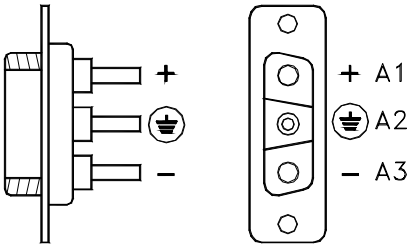

Matching mobile connector

3.2 For frame N3 mounting

Tighten the kit supplied brackets [item 1] with the same screws used for rack mounting. Introduce the dehydrator into the frame and lock it with the screws supplied in the kit and proceed like §3.1 for rack 19” mounting.

3.3 For wall mounting

Secure the wall mounting rack on the wall by using expanding screws and proceed like §3.1 for rack 19” mounting.

3.4 Alarm signalling interface

Remote alarm connector, 9 pin IEC48B D series, is located on the rear panel.

Remote **OR** alarm signalling are available by means of SPST (Single Pole Single Throw) relay contacts (it is normally energized, de-energized in alarm condition).

Maximum switching current 0.5A DC or AC.

SELV (Safety Extra-Low Voltage) power supply is required, with maximum allowable voltage of 42Vac or of 60 Vdc.

A typical user device interconnection is shown below.

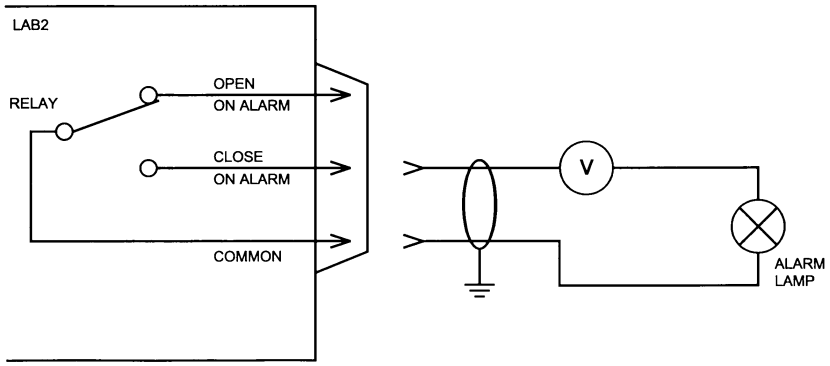

If alarm cabling exceeds 10 m (32 ft.) of length it is recommended to use a shielding cable.

Pin	Function
6	Contact open in alarm condition
7	Common
8	Contact closed in alarm condition

Table 1 (pin-out remote alarm connector)

3.5 First startup, switch on and switch off

Before switching on the equipment, remove the red label on the rear side of the desiccant cartridge.

Before proceeding to the first startup, mind to open the desiderated shutoff valve by using the apposite knob (located on the front panel). Screw down the knob in valve seat and pull out. Mind to place knob in its parking seat in order to avoid accidental closing of valves (by pushing knob down).

Switch on the dehydrator selecting the "**I**" (on) control switch position. Check *green power on led* lights.

Open the opposite side of the RF line to be pressurized. Purge the RF line with dry air by letting it open to the opposite side for a period able to let an air volume (three times the volume of the RF line) flow in the line [purging time (in hours) = (3xV)/100, with V: line volume in liters]. During this phase the warnings and alarms has to be ignored. Then close the opposite side of the RF line opened before.

Mind that the dehydrator enables the generation of warnings 20 sec. about after any switching on. After some time (depending on volume guide), the equilibrium condition is met.

The dehydrator is provided with a shutoff valve, one for each air outlet.

Display normally shows the so called *main page* (the displayed information relate to the running output pressure and the hour meter value; see §4.).

On **emergency** or if **stop** is required put control switch in "O" (off) position.

Mind that is mandatory disconnecting the dehydrator from the supply for servicing.

3.6 Replace desiccant cartridge

To replace the desiccant cartridge remove the front panel and pneumatic connection that connects it to the dehydrator's pump.

Remove the exhausted cartridge, insert the new one and restore the pneumatic connection.

<u>WARNING</u> do not disperse into the environment the contents of the cartridge. In case of difficulty in the disposal of the cartridge, contact the manufacturer.

3.7 Language setting

The equipment default menu is an english menu.

It is possible to set a different menu language by performing the following procedure:

- Switch the equipment off
- Push the left key an the front panel
- By letting pushed the key, switch the equipment on
- By repeating the previews 3 steps it is possible to have a circular changing of the menu languages according to the following sequence:

  English

  French

  Spanish

  Italian

4. MENU FUNCTIONS

A low-power HCMOS 8-bit microcontroller has been used. This choose with the adoption of a display and two function keys allows user to know a large amount of information and to set some parameters such as the pressure related ones and the warning thresholds. These data are arranged in pages showed on the display and are user selectable by pressing the key "↳".

On startup the following *main page*[1] (permanent page) is displayed. In this page the operating gauge pressure and the hour meter value are showed:

P	r	e	s	s	u	r	e			2	.	0	k	P	a
h	o	u	r	m	e	t	e	r			0	0	0	1	2

The First row indicates the operating gauge pressure (kPa). In the example showed, we read a running measured pressure of "2.0 kPa". The second row shows the hour meter status. The example says the dehydrator has been running 12 hours long.

Press the key " ⬆ " for lamp test. *Warning led* lights 0.5 seconds about and the display is refreshed.

When warning(s) is active, on the second row disappears the indication of the hour meter status and the appropriate warning message is shot. For example, on *Low pressure* condition the display shows:

P	r	e	s	s	u	r	e			1	.	0	k	P	a
		L	O	W		P	R	E	S	S	U	R	E		

This example says the operating gauge pressure is "1.0 kPa" (low pressure factory default threshold is 1.5 kPa). The string "LOW PRESSURE" is the warning message related to the *low pressure* condition.

[1] A new page appears on the display when the key "↳" is pressed. Firmware provides an *automatic return* to the *main page* from any implemented one (*secondary pages*). The timeout is fixed in one minute. At any pressing of the key "↳", user scrolls all the data pages implemented (*secondary pages*) until *main page* is selected again.

Press the key "↳" to gain the **Pressure target setting menu**. Display shows the following (factory default is 2.0 kPa):

```
P r e s s u r e   s e t
  p o i n t :     2 . 0   k P a
```

The example says the target pressure is 2.0 kPa. Press the key " ⬆ " to increase the pressure target at a fixed step of 0.1 kPa. Increment function key only is provided. When the maximum selectable value is reached (4.0 kPa), the minimum allowable value (0.1 kPa) is automatically displayed at the next key pressing. Press the key "↳" to scroll next page and to **enter** the new target pressure setting[2].

On the display appears the **Low pressure setting menu** (factory default is 1.5 kPa):

```
L o w   p r e s s u r e
  a l a r m :     1 . 5   k P a
```

Press the key " ⬆ " to increase the low pressure threshold with a 0.1 kPa fixed step. Increment function key only is provided. When the maximum value is reached (target pressure, selected in the previous page, minus 0.1), the minimum allowable value (0 kPa) is automatically displayed at the next key pressing. For instance, if running target pressure is 2.0 kPa, the software allows user to choose a threshold value in the range 0 kPa ÷ 1.9 kPa.

Mind, at startup, all warnings are inhibited during the first 20 seconds of working.

The *Low pressure* warning generation acts in accordance with an hysteresis mechanism. For instance, if the low pressure threshold has been set at 1.5 kPa, *low pressure warning* occurs if the gauge pressure is constantly at (or below) the pressure target for five seconds at least. The warning immediately expires when the gauge pressure runs over the threshold value plus 0.2 kPa (fixed).

Press the key "↳" to **enter** the new threshold and to return at the *main page*.

4.1. Signal lights

The dehydrator has two signaling LED's:

- **ON**, color - green
- **WARNING**, color - red.

The WARNING led lights on every warning condition. The warning type message is displayed on the second row of the dehydrator display (see §4.). Whatever the warning(s) declared, there is no interruption in duty and air continues to be supplied.

[2] In order to avoid quick changes in the operating pressure, the target pressure is not modified when in this page.

5. SPARE PART LIST

Description	Model Name
Desiccant cartridge	LAB2-001
Pump unit	Tba
Safety valve	Tba
Power supply 24-72 Vdc	Tba
Control board LCA	Tba

N.B.: Please always indicate the equipment P/N or S/N on your orders.

6. ADDITIONAL PART LIST

Description	Model Name
Butyl tube 6 x 3 mm (1/4”)	Tube-01
Tube adapter M12 x 1.5 for tube with 6-7 mm (1/4”) inner diameter	Tube-01-M12
Tube adapter M10 x 0.75 for tube with 6-7 mm (1/4”) inner diameter	Tube-01-M10
Tube adapter G 1/8” for tube with 6-7 mm (1/4”) inner diameter	Tube-01-G18
Tube clamp 10 – 16 mm stainless steel (1/4” & 3/8)	Tube-1016

ANCILLARY KIT CODE K10531

ITEM	PICTURE	QTY	DESCRIPTION	CODE
1		2	ETSI-N3 brackets	C10522
2		4	Zinc plated screws M6x16 UNI 7687	5VBSFZA00616
		4	Nylon washers Ø 6 UNI 6592-69	5RPGY6V4***1
3		1	Socket connector D-sub 3W3-C-S-TpX	3JAFV033Z
		2	High power contacts (10A) solder cup - socket	3JAF***AA
		1	High power contacts (10A) solder cup - plug	3JAM***AD
4		1	Junction shell with screws D-sub 3W3-C	3EA0B5

ITEM	PICTURE	QTY	DESCRIPTION	CODE
5		1	Wall mounting rack	C10529
6		1	Junction shell with screws D-sub-9	3EA0A4
7		1	Socket connector D-sub-9 solder pot	3JAFV09**18

LAB2DC-B OUTLINE

Note: (inch)

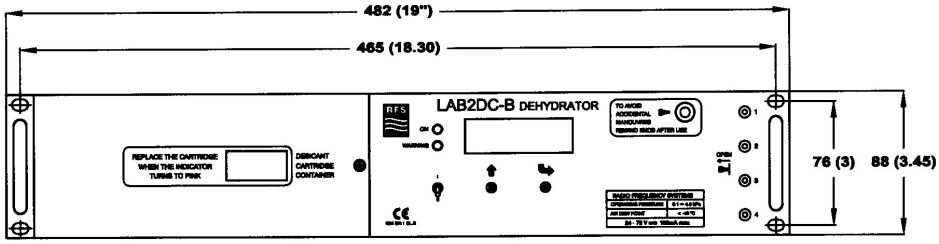

19" RACK MOUNTING

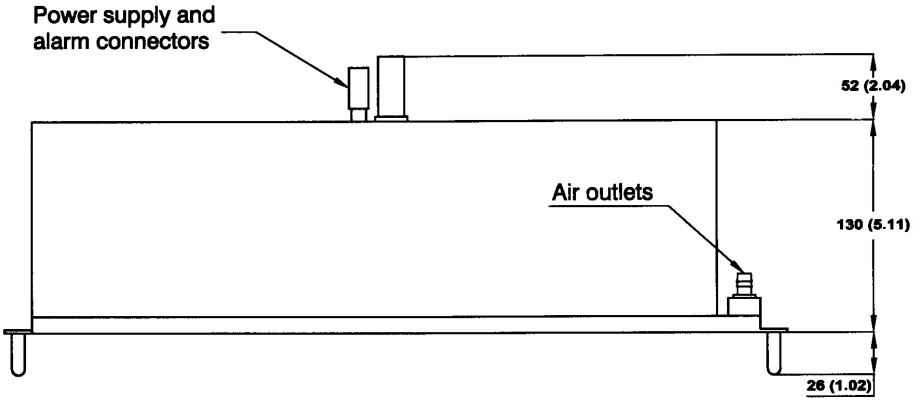

ETSI N3 FRAME MOUNTING

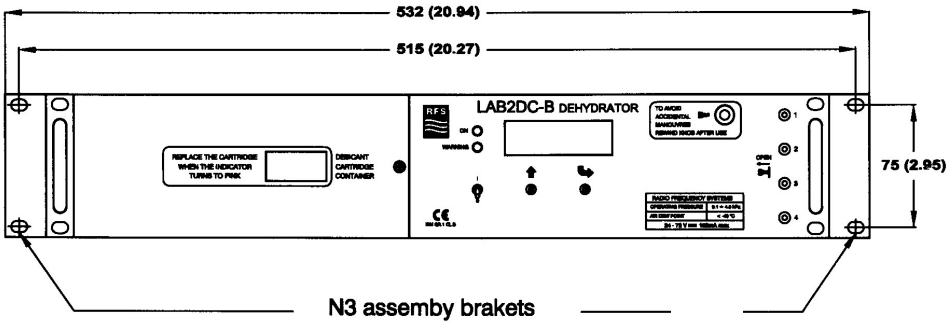
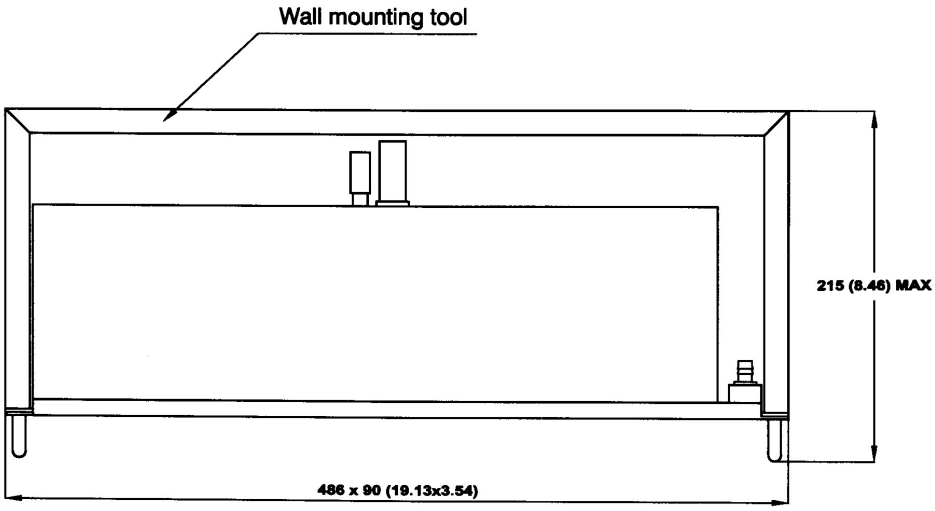
WALL MOUNTING